Electrolux PROFESSIONAL

High Productivity Cooking Gas Tilting Braising Pan, 100lt, Hygienic Profile, Freestanding

ITEM #

MODEL #

NAME #

SIS #

AIA #

586181 (PFET10GCCO)	Gas tilting Braising Pan 100lt (h) with compound bottom, GuideYou panel, freestanding

Short Form Specification

Item No.

AISI 304 stainless steel construction. GN compliant pan size; 18mm thick pan bottom (15mm mild steel and 3 mm AISI 316 stainless steel). Insulated and counterbalanced lid. Motorized tilting with variable speed control. Pan can be tilted beyond 90° to completely empty the food. Robust multiple burners with electronic ignition and monitoring. Safety thermostat protects the pan from overheating. A precise, electronic control of pan bottom temperature ensures fast reaction and exact adherence to preselected cooking temperatures between 50° and 250°C. TOUCH control panel. SOFT function. Possibility to store recipes in single or multiphase cooking process, with different temperature settings. Built in temperature sensors for precise control of cooking process. IPX6 water resistant. Configuration: Free-standing or Standing against a wall. Installation options (not included): floor mounted on 200mm high feet or a plinth which can be either steel or masonry construction.

APPROVAL:

Main Features

- Pan size is GN compliant.
- Temperature sensors provides efficient temperature control: the power is supplied as and when required to keep the set temperature value without exceeding it.
- Optimum heat distribution in the food provides best cooking results in terms of taste, colour and consistency and in terms of vitamin preserving.
- Easy to clean cooking surface due to large-radius edges and corners.
- IPX6 water resistant.
- Motorized, variable pan tilting with "SOFT STOP". Tilting and pouring speeds can be precisely adjusted. Pan can be tilted over 90° to facilitate pouring and cleaning operations.
- Built in temperature sensor to precisely control the cooking process.
- No overshooting of cooking temperatures, fast reaction.
- USB connection to easily update the software, upload/download recipes and download HACCP data.
- Multifunctional cooking appliance used for roasting, pot-roasting, braising, simmering, boiling and steaming.

Construction

- External panelling and internal frame made of 1.4301 (AISI 304) stainless steel.
- Multipurpose non-stick cooking surface in 18 mm thick compound: 3 mm shot-blasted 1.4404 (AISI 316L) stainless steel surface, seamlessly welded to the mild steel bottom.
- Double-lined insulated lid in 1.4301 (AISI 304) stainless steel mounted on the cross beam of the unit, counterbalanced by a hinge that remains open in all positions.
- Gas appliance has robust multiple burners with electronic ignition and monitoring for a safer operation. Operation with natural gas and LPG (on request).
- Water mixing tap is available as optional accessory to make water filling and pan cleaning easier.
- Minimised presence of narrow gaps for easier cleaning of the sides to meet the highest hygiene standards.
- Heatproof handle with non-slip surface.
- Front-mounted inclined led "TOUCH" control panel with recessed deep drawn casing, features self-explanatory display functions which guide operator throughout the cooking process: simultaneous display of actual and set temperature as well as set cooking time

and remaining cooking time; real time clock; "SOFT" control for gentle heating up for delicate food; 9 power simmering levels from gentle to heavy boiling; timer for deferred start; error display for quick trouble-shooting.

- Possibility to store recipes in single or multiphase cooking process, with different temperature settings.
- Can be prearranged for energy optimisation or external surveillance systems (optional).
- 98% recyclable by weight; packaging material free of toxic substances.
- Lateral surface of the vessel in DIN 1.4301/AISI 304.
- GuideYou Panel - activated by the user via settings – to easily follow the multiphase recipes, granting a proper and controlled cooking and a better appliance optimization.
  The system will provide maintenance reminders, in line with ESSENTIA program, helping the user to properly take care of the product, avoiding downtimes.
- Highly-visible and bright led TOUCH control panel features user-friendly icons and intuitive self-explanatory command options. Display visualizes:
  - Actual and set temperature
  - Set and remaining cooking time
  - Pre-heating phase (if activated)
  - GuideYou Panel (if activated)
  - Deferred start
  - Soft Function to reach the target temperature smoothly
  - 9 Power Control levels from simmering to fierce boiling
  - Pressure mode (in pressure models)
  - Stirrer ON/OFF settings (in round boiling models)
  - Error codes for quick trouble-shooting
  - Maintenance reminders

User Interface & Data Management

- Connectivity ready for real time access to connected appliances from remote and data monitoring (requires optional accessory – contact the Company for more details).

Sustainability

- High-quality thermal insulation of the pan saves energy and keeps operating ambient temperature low.

Optional Accessories

• Strainer for dumplings for all tilting & stationary braising and pressure braising pans (except 80lt) and for all stationary rectangular and 100lt round boiling pans	PNC 910053	❑
• Scraper for dumpling strainer for boiling and braising pans	PNC 910058	❑
• Perforated container with handles 1/1GN (height 150mm) for boiling and braising pans	PNC 910212	❑
• Stainless steel plinth for tilting units - against wall - factory fitted	PNC 911425	❑
• Stainless steel plinth for tilting units - freestanding - factory fitted	PNC 911455	❑
• Small perforated shovel for braising pans (PFEN/PUEN)	PNC 911577	❑
• Small shovel for braising pans (PFEN/PUEN)	PNC 911578	❑
• Bottom plate with 2 feet, 200mm for tilting units (height 700mm) - factory fitted	PNC 911930	❑
• C-board (length 1600mm) for tilting units - factory fitted	PNC 912188	❑
• Power Socket, CEE16, built-in, 16A/400V, IP67, red-white - factory fitted	PNC 912468	❑
• Power Socket, CEE32, built-in, 32A/400V, IP67, red-white - factory fitted	PNC 912469	❑
• Power Socket, SCHUKO, built-in, 16A/230V, IP68, blue-white - factory fitted	PNC 912470	❑
• Power Socket, TYP23, built-in, 16A/230V, IP55, black - factory fitted	PNC 912471	❑
• Power Socket, TYP25, built-in, 16A/400V, IP55, black - factory fitted	PNC 912472	❑
• Power Socket, SCHUKO, built-in, 16A/230V, IP55, black - factory fitted	PNC 912473	❑
• Power Socket, CEE16, built-in, 16A/230V, IP67, blue-white - factory fitted	PNC 912474	❑
• Power Socket, TYP23, built-in, 16A/230V, IP54, blue - factory fitted	PNC 912475	❑
• Power Socket, SCHUKO, built-in, 16A/230V, IP54, blue - factory fitted	PNC 912476	❑
• Power Socket, TYP25, built-in, 16A/400V, IP54, red-white - factory fitted	PNC 912477	❑
• Panelling for plinth recess (depth from 70 to 270mm) for tilting units - factory fitted (Deutschland, Austria, Switzerland) - factory fitted	PNC 912479	❑
• Additional panelling plinth for tilting units (width 120mm) - factory fitted (Deutschland, Austria, Switzerland)	PNC 912486	❑
• Connecting rail kit for appliances with backsplash, 900mm	PNC 912499	❑
• Connecting rail kit, 900mm	PNC 912502	❑
• Mainswitch 25A, 2.5mm² for gas units - factory fitted	PNC 912702	❑
• Rear closing kit for tilting units - against wall - factory fitted	PNC 912708	❑
• Suspension frame GN1/1 for tilting braising pans	PNC 912709	❑
• Automatic water filling (hot and cold) for tilting units - to be ordered with water mixer - factory fitted	PNC 912735	❑
• Rear closing kit for tilting units - island type - factory fitted	PNC 912748	❑
• Lower rear backpanel for tilting units with or without backsplash - factory fitted	PNC 912772	❑
• Spray gun for tilting units - freestanding (height 700mm) - factory fitted	PNC 912776	❑
• Food tap 2" for tilting braising pans (PUET-PFET) - factory fitted	PNC 912780	❑
• Emergency stop button - factory fitted	PNC 912784	❑

The company reserves the right to make modifications to the products without prior notice. All information correct at time of printing.

2024.10.08

• Connecting rail kit: modular 90 (on the left) to ProThermetic tilting (on the right), ProThermetic stationary (on the left) to ProThermetic tilting (on the right)	PNC 912975	❑
• Connecting rail kit: modular 80 (on the right) to ProThermetic tilting (on the left), ProThermetic stationary (on the right) to ProThermetic tilting (on the left)	PNC 912976	❑
• Connecting rail kit for appliances with backsplash: modular 90 (on the left) to ProThermetic tilting (on the right), ProThermetic stationary (on the left) to ProThermetic tilting (on the right)	PNC 912981	❑
• Connecting rail kit for appliances with backsplash: modular 90 (on the right) to ProThermetic tilting (on the left), ProThermetic stationary (on the right) to ProThermetic tilting (on the left)	PNC 912982	❑
• 1 basket 1/1 GN for 40lt pasta cooker, ProThermetic braising and pressure braising pans, GN compatible (to be combined with suspension frame)	PNC 913134	❑
• Scraper without handle for braising pans (PFEX/PUEX)	PNC 913431	❑
• Scraper with vertical handle for braising pans (PFEX/PUEX)	PNC 913432	❑
• Mixing tap with drip stop, two knobs, 815mm height, 600mm swivelling depth for PBOT/PFET - factory fitted	PNC 913554	❑
• Mixing tap with drip stop, two knobs, 815mm height, 450mm swivelling depth for PBOT/PFET - factory fitted	PNC 913555	❑
• Mixing tap with drip stop, two knobs, 685mm height, 600mm swivelling depth for PBOT/PFET - factory fitted	PNC 913556	❑
• Mixing tap with drip stop, two knobs, 685mm height, 450mm swivelling depth for PBOT/PFET - factory fitted	PNC 913557	❑
• Mixing tap with two knobs, 520mm height, 600mm swivelling depth for PXXT- KWC - factory fitted	PNC 913567	❑
• Mixing tap with one lever, 564mm height, 450mm swivelling depth for PXXT- KWC - factory fitted	PNC 913568	❑
• Connectivity kit for ProThermetic Boiling and Braising Pans ECAP - factory fitted	PNC 913577	❑

Recommended Detergents

• C41 HI-TEMP RAPID DEGREASER. Suitable for cleaning plates and grills with high temperature surfaces (max 175°C). Pack of 6 1l bottles (includes 1 spray bottle code 0S2331)	PNC 0S2292	❑

The company reserves the right to make modifications to the products without prior notice. All information correct at time of printing.

High Productivity Cooking Gas Tilting Braising Pan, 100lt, Hygienic Profile, Freestanding

Front

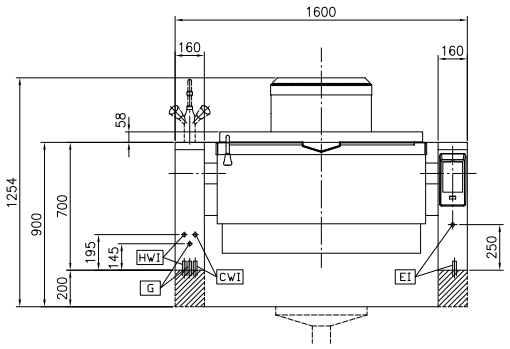

Side

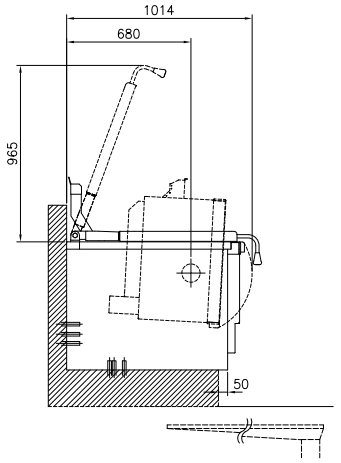

CWI1 = Cold Water inlet 1 (cleaning)
HWI = Hot water inlet
EI = Electrical inlet (power)
G = Gas connection

Top

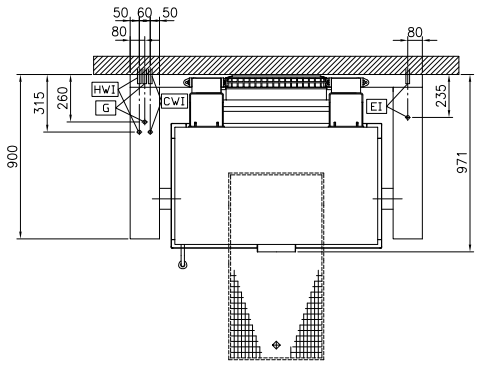

Electric

Supply voltage:	
586181 (PFET10GCCO)	230 V/1N ph/50/60 Hz
Total Watts:	0.2 kW

Gas

Gas Power:	26 kW

Installation:

Type of installation:	FS on concrete base;FS on feet;On base;Standing against wall

Key Information:

Configuration:	Rectangular;Tilting
Working Temperature MIN:	50 °C
Working Temperature MAX:	250 °C
Vessel (rectangle) width:	1050 mm
Vessel (rectangle) height:	169 mm
Vessel (rectangle) depth:	558 mm
External dimensions, Width:	1600 mm
External dimensions, Depth:	900 mm
External dimensions, Height:	700 mm
Net weight:	270 kg
Net vessel useful capacity:	76 lt
Tilting mechanism:	Automatic
Double jacketed lid:	✓
Heating type:	Direct

The company reserves the right to make modifications to the products without prior notice. All information correct at time of printing.